Hagstrom Ultra Max

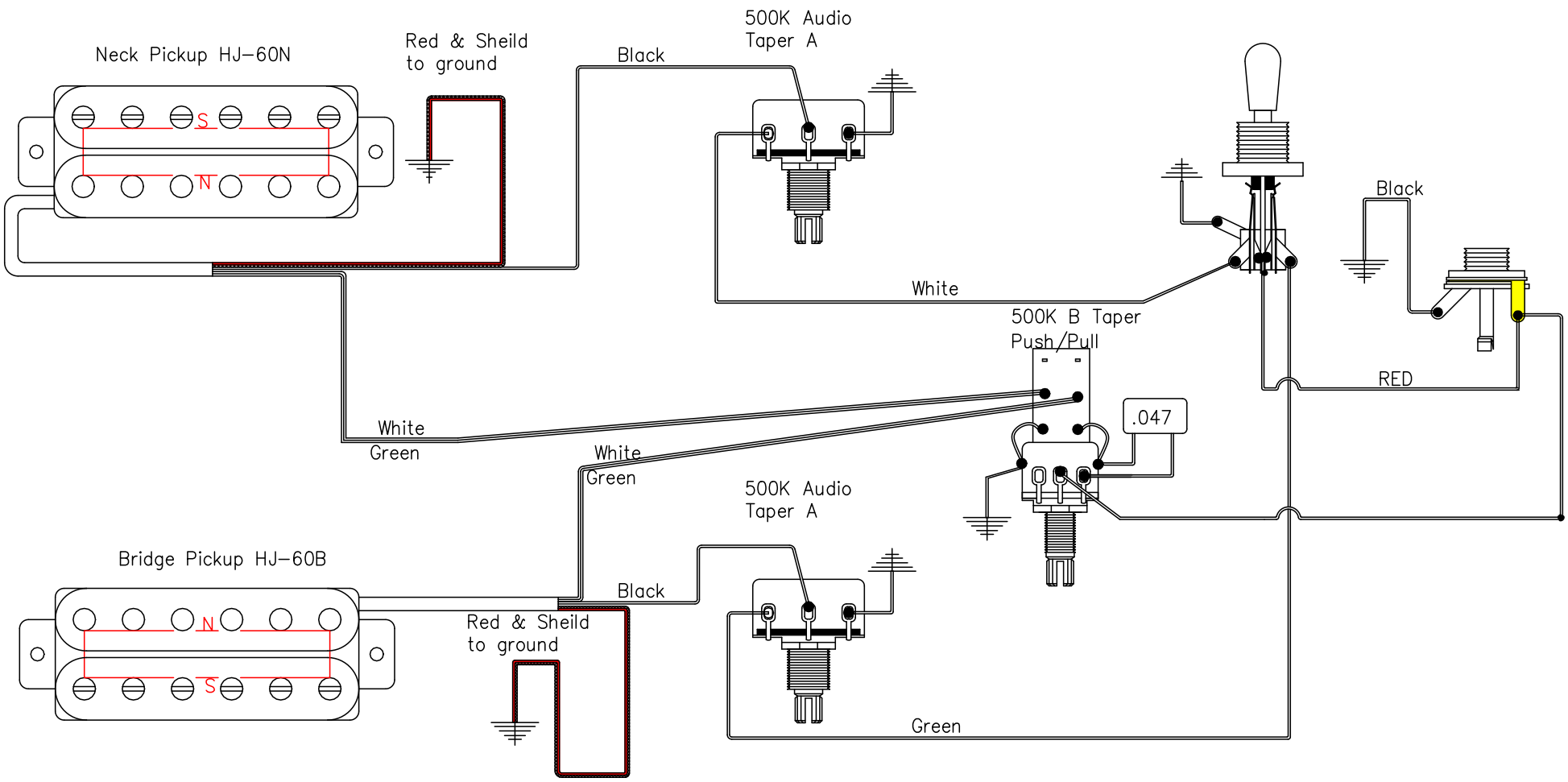

Model: Ultra Max
Make: Hagstrom
Note: This wirering allows for complete seperation of Volume controls
August 03, 2016
Drawing: David Lee